From Components to Systems

CNC-Servo-Controller

iMC-B
iMC-V

Operating Instruction

isel Germany AG, D-36124 Eichenzell, Bürgermeister-Ebert-Str. 40 ☎ (06659)981-0 🖷 (06659)981-776

All information, technical data and dimensions contained in this booklet correspond to the technical state at the moment of publication. However, possible misprints or mistakes cannot be ruled out. We will appreciate all suggestions for improvement and error notes.

We would like to point out that all used software and hardware names of the respective companies generally are subject to protection by brand, trademark and patent law.

This booklet has been translated from the original German version into English language. It does not lay claim to completeness nor flawlessness. In case of doubt the German original has validity.

isel controllers are concurrent with CE norms and marked accordingly. Commissioning of all other parts or components, for which CE safety regulations apply, is prohibited until all respective requests are met.

isel Germany AG as the manufacturer cannot take over guarantee if you change the controller in any way.

The EMC test is valid only for the controllers original configuration ex works, i.e. the delivery state.

Manufacturer: **isel Germany AG**
Bürgermeister-Ebert-Straße 40
D-36124 Eichenzell

Tel.: (06659) 981-0
Fax: (06659) 981-776
Email: automation@isel.com
http://www.isel.com

Status: 08/2011

Technical specifications subject to change.
Up to date Operating instructions and manuals for download you can find here:

www.isel-data.de/manuals

Table of contents

1 Introduction

The iMC series CAN-controllers are compact, powerful drive controllers for 2 up to 6 linear or rotational axes. The shapely table housing integrates all control components that are needed for most different automation tasks. They include the control computer, motor power amplifiers, I/O module and security circuit module. Additionally a 10,2” LC-Display and a keyboard are integrated. A CANopen PCI-card that works as interface is mounted into the control computer. This card works as CAN-master to communicate with the power amplifiers for the axes and other CAN peripheral devices such as I/O-module. The CNC Motion control allows the interpolation of up to 6 axes (linear, circular and helix), on-line and look ahead continuous path (CP) machining as well as the control of up to 6 handling axes.

The CAN-controllers series **iMC-B** are able to drive up to 6 brushed DC-servo-motors. The used power amplifiers type **iMD10** have a jerk limit and standstill monitoring (till safety category 3).

Controller’s series **iMC-V** are able to drive up to 6 brushless DC-servo-motors. The used power amplifiers type **iMD20** have a jerk limit and standstill monitoring (till safety category 3).

1.1 Safety symbols

Warning!
This symbol indicates dangers that cause damages for person’s health, physical injury or death.

Warning! Dangerous voltage!
Warning of danger from electricity. Ignoring can lead to serious injury or death.

Attention!
This Symbol indicates important notes. Ignoring this symbol leads to damages and malfunctions of the machinery

Information:
This symbol indicates important information and notes.

1.2 Safety instructions

- The CNC-controllers iMC-B and iMC-V are designed in conformability to current technical and recognized rules.
- The device may only be used if it is in correct condition. Any faults have to be eliminated immediately. Neither children nor non-authorized persons are allowed to put the device into operation.
- The device may only be used for the intended purpose: control of 2 up to 6 linear or rotational axes with brushed DC Servo (iMC-B) or brushless DC servo motors (iMC-V), both motor types with integrated incremental measurement system (encoder).
- All work with the controllers iMC-B and iMC-V, especially initial operation, installation as well as external wiring must be executed by authorized personal regarding electrical industry rules and accident prevention regulations.
- Assembly and use of operating material has to be according to Machine directive 98/37/EC (valid until 28/12/2009) resp. 2006/42/EC (becomes operative from 29/12/2009) and Low voltage directive 73/23/EWC. In case of in proper use even the observation of the respective rules and standards does not protect against physical damages and damage to property.
- Do not expose the device to high humidity or high vibrations.
- Please take care of the instruction manual. Be sure that all users know the instructions.
- Ignoring the instruction manual can lead to damage, heavy physical damage or to death.

2 Controller types

Controller type	Motor type	power amplifier	max. axis
iMC-B	Brushed isel - DC-servo-motors (BDC)	iMD10	6
iMC-V	Brushless isel - DC-servo-motors (BLDC)	iMD20	6

All controllers have to be used only with the compatible motor type.
Please read this operation instruction manual carefully before first use of the controller.

***Scope of delivery* - iMC-B** (Part.-No. 354000 10X[1]0)

- Servo-controller iMC-B as desk device with the following components:
  - 2 - 6 integrated power amplifiers iMD10 for brushed DC-servo-motors (B-DC) /1/
  - Control PC iSR10 with CAN PCI card iCC10
  - CAN IO 16/16 module
  - Security circuit module iSM5 (not useable on CAN bus)
- 10,2" LCD with touch screen and mini keyboard in the case front
- Main cable (protection contact plug, IEC-60320 power connector)
- RS232-communication cable, 9-pin Sub-D (plug) to RJ45 (plug)
- Connector package
- Control software Remote (option: ProNC)
- Operating instruction in printed form
- Option: frequency inverter 750W for working spindle,
  ➔ max. 4 axis possible

***Scope of delivery* - iMC-V** (Part.-No. 354000 20X[1]0)

- Servo-controller iMC-V as desk device with the following components:
  - 2 - 6 integrated power amplifiers iMD20 for brushless DC-servo-motors (BL-DC) /2/
  - Control PC iSR10 with CAN PCI card iCC10
  - CAN IO 16/16 module
  - Security circuit module (not useable on CAN bus)
- 10,2" LCD with touch screen and mini keyboard in the case front
- Main cable (protection contact plug, IEC-60320 power connector)
- RS232-communication cable, 9-pin Sub-D (plug) to RJ45 (plug)
- Connector package
- Control software Remote (option: ProNC)
- Operating instruction in printed form
- Option: frequency inverter 750W for working spindle,
  ➔ max. 4 axis possible

[1] X-number of power amplifiers, 2 - 6

3 Technical data

controller	iMC-B	iMC-V
servo-motor type	BDC-servo-motors (brushed DC)	BLDC-servo-motors (brushless DC, EC)
maximum number of axis	6	6
power supply	115-230 VAC, 50 … 60 Hz	115-230 VAC, 50 … 60 Hz
power supply output	1000 W	1000 W
motor power amplifier	iMD10	iMD20
intermediate circuit power supply	48 VDC	48 VDC
rated current	12 A	12 A
peak current	25 A	25 A
safety category	3	
additional safety functions	integration in higher ranked security circuit , safety door control, working spindle control	
I/O-extension-board	16 x digital inputs (8 inputs useable, 8 inputs internal used) 16 x digital outputs (8 outputs useable, 8 outputs internal used) 1 x 115-230V relais output (max. 6 A) option: 1 x analog output (8 Bit, 0 …10 V)	
TFT-display	10,2 “ TFT-display with touchscreen	
Integrated keyboard	mini keyboard	
control PC	1,6 GHz-processor RAM ≥ 1 GB hard disk 2,5“ SATA ≥ 80 GB^ 2 x USB 2.0 in case front	
operation	function keys, emergency stop	
operating system	WEPOS® 2009	
software	Remote (option: ProNC, isyCAD/CAM)	
Dimensions W x H x D	625 x 225 x 375	625 x 225 x 375

4 Hardware description

4.1 Controller front side iMC-B / iMC-V

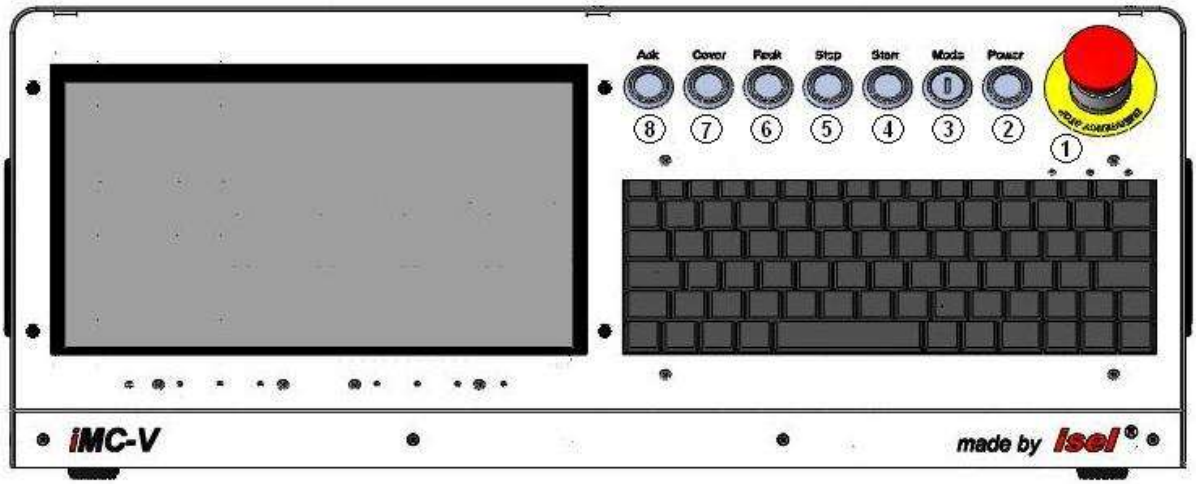

1 - emergency-stop-switch

Turns off the power supply for the motor power amplifiers and the working spindle in case of any danger. This means dangers for the users health or machine safety. The integrated security circuit is applicable till safety category 3 (DIN EN945-1).

If you push the emergency stop switch any axes motion will be slow down controlled and the motor power supply will be time lag switched off (stop category 1).
The main power supply voltage of 115/230VAC lies still on the device, only the motor power supply voltage for the amplifiers is switched off.

2 - power-button

Use this button to switch on motor power supply voltage for the motor power amplifiers.
Conditions for switch on:
- Main power switch on the controller back side is switched on
- Emergency stop button is pulled out

If power supply voltage is successfully switched on the power button is lighted green.

3 - operation mode switch (key switch)
Use this switch to choose between automatic- and setup-mode.

*In **automatic-mode** you can **only open** the **cover or safety door** of the machine if **no axis is in motion** and the mounted **working spindle** is **switched off** (means that spindle does not turn).*

*In **the setup-mode** you can **only open** the **cover or safety door** of the machine if the mounted **working spindle** is **switched off** (means that spindle does not turn). You can just **move the axes at opened cover or safety door** if you **press** the **ACK button**.*

Ensure that in setup-mode (key switch on TEST) only authorized personal operates on the machine.

4 - start-button

If you press the start button an opened user program in the operator software ProNC (ISO-, PAL- or NCP-file) resp. user program in control software Remote (ISO-, NCP- or CNC-file) will be started.

If there is no user program opened a dialog window is shown where you can select an user program.

5 - stop-button

With the stop button you can stop a running user program / axis motion. By pressing the start button you can continue the execution of the user program.

6 - cover-button

Use this button to open the machines cover or safety door. This is possible only if the conditions from point “3 – operation mode switch“ are complied. An enable for opening of the cover or safety door is signalized by a white lighted cover button.

7 - fault-lamp

The fault lamp indicates an error within the safety circuit.

8 - ACK (ACKnowledge-button)

Press this button to move the axes when the machine is in setup-mode and the cover or safety door is open.

4.2 Controller back side iMC-B / iMC-V

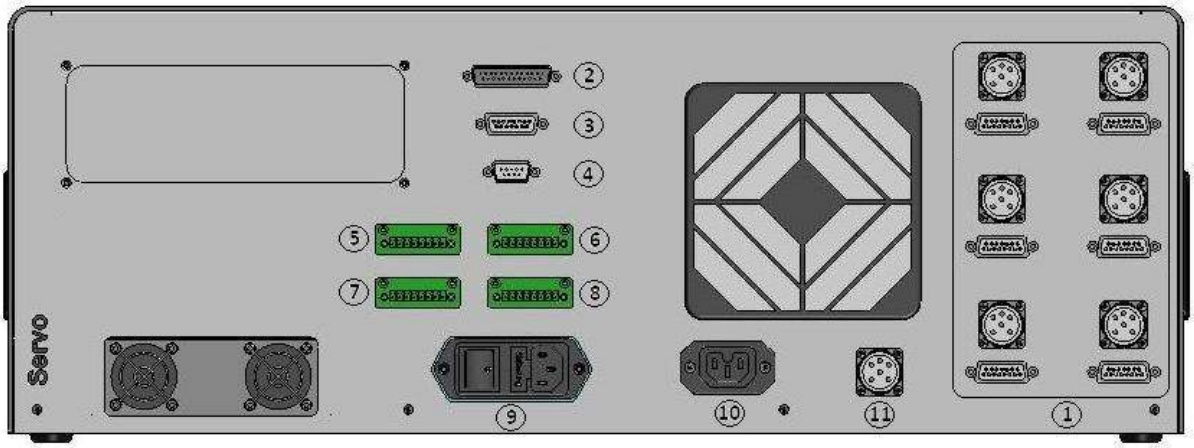

① **<u>iMC-B connectors for motor-, encoder- and signal lines</u>**

motor connector (X, Y, Z, A, B, C), 6-pin M23 socket

pin	signal	line color	description
1	1	brown /green	motor phase 1
2	2	white / yellow	motor phase 2
3	PE	yellow/green	protected earth (PE)
5	Brake	brown	motor brake
6	Brake_GND	white	motor brake GND

encoder/ signal connector, 15-pin Sub-D socket

pin	signal	line color	description
1	n.c		
2	VCC_Encoder	red	digital +5V DC
3	/ENC_Z	orange / black	encoder line /Z
4	/ENC_B	brown / black	encoder line /B
5	/ENC_A	grey / black	encoder line /A
6	VCC_Logik		logic +24V DC
7	LIMIT_SW1		limit switch 1
8	GND_24V		Logik GND
9	n.c	white	Hall signal B
10	D_GND	black	digital GND
11	ENC_Z	orange	encoder line Z
12	ENC_B	brown	encoder line B
13	ENC_A	grey	encoder line A
14	REF_SW		reference switch
15	LIMIT_SW2		limit switch 2

iMC-V connectors for motor-, encoder- and signal lines

motor connector (X, Y, Z, A, B, C), 6-pin M23 socket

pin	signal	line color	description
1	U	black 1	motor phase U
2	V	black 2	motor phase V
3	W	black 3	motor phase W
5	Brake	brown	motor brake
6	Brake_GND	white	motor brake GND
9	PE	yellow / green	protected earth (PE)

encoder/ signal connector, 15-pin Sub-D socket

pin	signal	line color	description
1	HALL_A _IN	yellow	Hall signal A
2	VCC_Encoder	red	digital +5V DC
3	/ENC_Z	orange / black	encoder line /Z
4	/ENC_B	brown / black	encoder line /B
5	/ENC_A	grey / black	encoder line /A
6	VCC_Logic		logic +24V DC
7	LIMIT_SW1		limit switch 1
8	GND_24V		Logik GND
9	HALL_B_IN	white	Hall signal B
10	D_GND	black	digital GND
11	ENC_Z	orange	encoder line Z
12	ENC_B	brown	encoder line B
13	ENC_A	grey	encoder line A
14	HALL_C_IN	green	Hall signal C
15	LIMIT_SW2		limit switch 2

② **hand control unit** - 25-pin Sub-D (optional version)

This connector is only available on controller without integrated function keys in the case front.

It is possible to connect function keys (switches, buttons) from:

- an external hand control unit
- an isel CNC control panel

with the corresponding connectors on the security circuit module inside the controller case.

pin	signal	description
1	E-STOP_1	Emergency stop channel 1, 1.1
2	E-STOP _1	Emergency stop channel 1, 1.2
3	E-STOP _2	Emergency stop channel 2, 2.1
4	E-STOP _2	Emergency stop channel 2, 2.2
5	24V	+24 V DC
6	POWER BTN	Input power button
7	POWER LAMP	Output power button lamp
8	24V	+24VDC
9	KEY SWITCH Test	Input key switch test mode
10	KEY SWITCH Auto	Input key switch automatic mode
11	24V	+24VDC
12	ACK_1	Input acknowledge button channel1
13	24V	+24VDC
14	ACK_2	Input acknowledge button channel 2
15	COVER SWITCH	Input cover button
16	COVER SWITCH	Input cover button
17	GND	
18		
19		
20	FAULT LAMP	output FAULT lamp
21	START BTN	Input START button (make contact)
22	STOP BTN	Input STOP button (break contact)
23	START LAMP	Output START lamp
24	STOP LAMP	Output STOP lamp
25	n.v.	

The maximum length of the connection cable for the hand control unit / CNC control panel should not exceed 5m.

③**External additional control console connector** - 15-pin Sub-D (optional)
This connector is used if an additional isel control console is used.

pin	signal	description
1	EM_STOP_1	Emergency stop channel 1, connector 1.1
2	EM_STOP_1	Emergency stop channel 1, connector 1.2
3	EM_STOP_2	Emergency stop channel 2, connector 2.1
4	EM_STOP_2	Emergency stop channel 2, connector 2.1
5	GND	GND control console
6	LAMP ACK	Output ACK lamp
7	ACK_1	Acknowledge channel 1, connector 1.1
8	ACK_1	Acknowledge channel 1, connector 1.2
9	ACK_2	Acknowledge channel 2, connector 2.1
10	ACK_2	Acknowledge channel 2, connector 2.2
11	COVER_1	Connector for cover button, connector 1.1
12	COVER_1	Connector for cover button, connector 1.2
13	COVER_2	Connector for cover button, connector 2.1 (option)
14	COVER_2	Connector for cover button, connector 2.1 (option)
15	n.v.	

The maximum length of the connection cable for the hand control unit / CNC control panel should not exceed 5m.

④ **Cover *connector***- *9-pin Sub-D- socket*

Use this connector to integrate a cover or door control in the security circuit of the controller.

pin	description
1	+ coil break contact
2	switch 1.1
3	switch 1.2
4	switch 2.1
5	switch 2.2
6	- coil break contact
7, 8, 9	not used

⑤ **Digital output port** - 8-pin, left to right A2.1 – A2.8

The mounted I/O board has two digital output ports each with 8 digital switches. The first output port (A1.1 – A1.8) is internal used for signalization. The second output port can free configured by the user

Properties

- 8 x electronic outputs
- Imax < 350mA, 24VDC
- Thermic protection
- short circuit proof

pin	output	description
1	Out1	output A2.1
2	Out2	output A2.2
3	Out3	output A2.3
4	Out4	output A2.4
5	Out5	output A2.5
6	Out6	output A2.6
7	Out7	output A2.7
8	Out8	output A2.8

Wiring

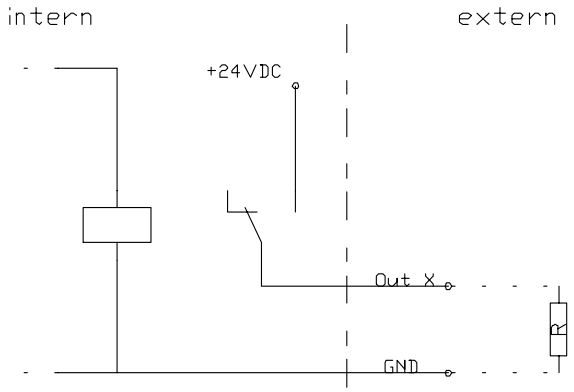

Please note the default connection of the first output –port (A1.1 – A1.8) in the control software Remote / ProNC under the menu entry „Signalization“.

These outputs are directly wired with the modules inside the controller. You <u>cannot longer</u> use these outputs in the user program!

⑥ **Digital input port** - 8-pin, left to right E1.1 – E1.8

The mounted I/O board has two digital input ports each with 8 digital inputs. The second input port (E2.1 – E2.8) is internal used for signalization. The first input port can free configured by the user.

Properties

- opt coupled inputs
- input current ca. 8mA

pin	input	description
1	In 1	Input E1.1
2	In 2	Input E2.2
3	In 3	Input E2.3
4	In 4	Input E2.4
5	In 5	Input E2.5
6	In 6	Input E2.6
7	In 7	Input E2.7
8	In 8	Input E2.8

Wiring

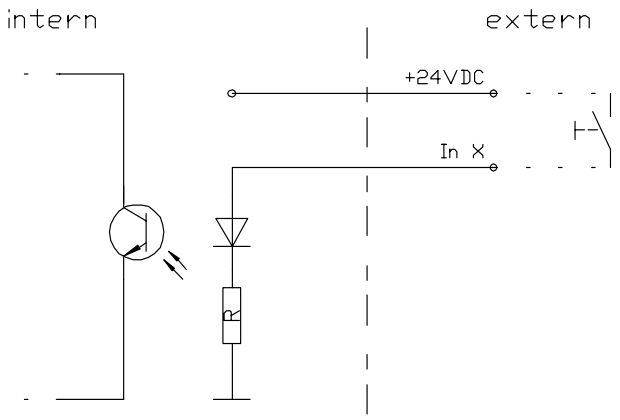

Please note the default connection of the second input –port (E2.1 – E2.8) in the control software Remote / ProNC under the menu entry „Signalization“.

These inputs are directly wired with the modules inside the controller. You <u>cannot longer</u> use these inputs in the user program!

⑦ **GND** - 8-pin

⑧ **+24VDC**- 8-pin

⑨ ***AC-Input*** *– net input module 115/230 VAC, 50 …60 Hz*

The net input module consists of net input socket, net filter, fuse holder and net main switch. Connect the controller via delivered net cable to a free receptacle. After that you can switch on the controller with the net main switch.

⑩ ***Spindle*** *-115V/ 230V connector*

Use this output connector to directly tap a working spindle without speed control. Use the delivered mating connector. Maximum load of the relay output is 115/230 V AC / 6A. The spindle start signal is switched by the integrated CAN-I/O-module and will be analyzed by the security-circuit-module (iSM5). If all safety related conditions are complied the 115/230 V AC voltage is switched on the connector.

Please note the pin assignment for the spindle start signal in the table for the CAN-I/O-module in chapter 4.2.

The net input module consists of net input socket, net filter, fuse holder und net main switch. Connect the controller via delivered net cable to a free receptacle. After that you can switch on the controller with the net main switch.

⑪ **Main spindle drive connector (optional)**

Use this connector to tap speed controlled working spindle (asynchronous motor). The (optional) frequency inverter is mounted inside the controller and will be controlled over the security-circuit- and I/O-module.

4.3 Assembly iMC-B / iMC-V

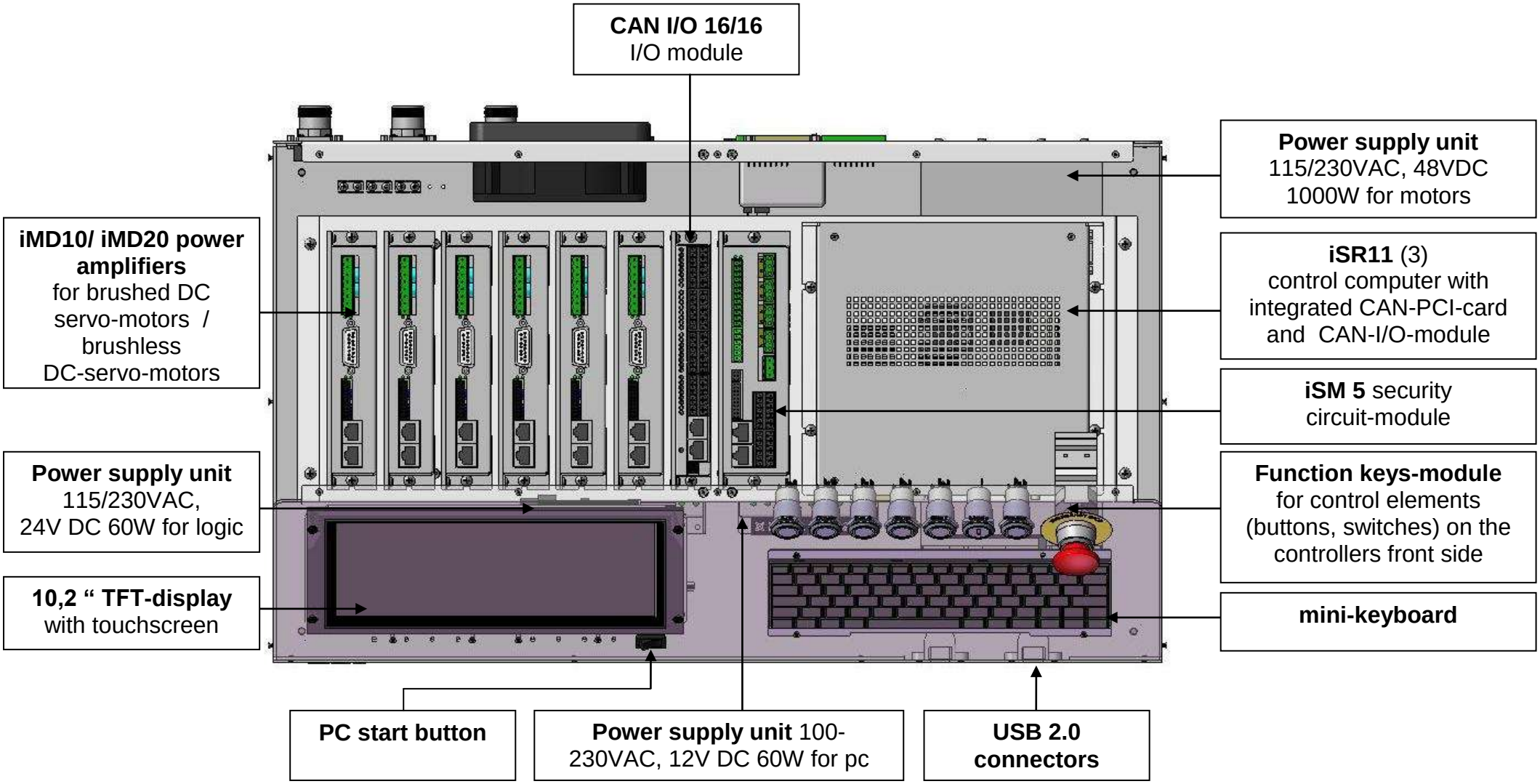

5 Initial operation

Preparation

Before power up of the controller please check the scope of delivery.
Following parts should be included:

- net cable
- operating instruction

Make all necessary connections:

- connect net cable
- connect motor- and encoder-lines (motors) with the connectors on the back side of the controller
- Check all other connected cables

Initial operation

- switch on controller main switch (back side)
- switch on control computer via green computer start button on the back side of the controller (control computer start button will be green lighted) → control computer is booting the installed operating system
- install control software (if not preinstalled)
    - ProNC (1) or Remote
- install setup software (if not preinstalled)
    - DCSetup (1)
    - ACSetup (2)
- check if Emergency stop switch is pulled
- push Power button on the controller front side – motor power amplifier voltage should be switched on
- parameterize power amplifiers with ACSetup.exe / DCSetup.exe
- setup axes kinematic of your machine/system with CANSet.exe
- Control/operate the connected axes with the control- and programming software ProNC or Remote

6 Software

6.1 Installing setup software

Setup / initial operation of the integrated power amplifiers inside the controller's iMC-B, iMC-V and iMC-VP takes place by the following setup software

DCSetup.exe (1)

for:

- **BDC-servo-motors (brushed-DC-servos) with motor power amplifiers iMD10**

or

ACSetup.exe (2)

for:

- **BLDC-servo-motors (brushless-DC-servos) with motor power amplifiers iMD20**

Do the following steps to install setup software additional:

1. Connect ProNC/Remote install medium (delivered CD or USB stick) with the control computer.

2. Following Auto-start-window will be shown (when installing from CD):

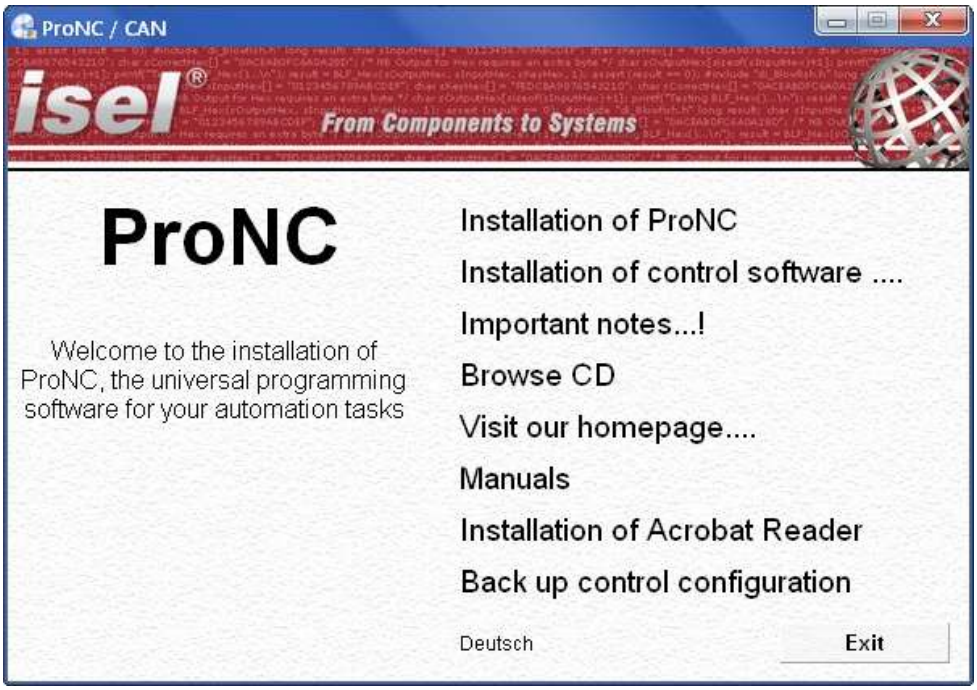

If Auto-Start-window is not shown start the Windows Explorer and open the root directory of the CD/DVD- or USB-drive. Double click on the file "Autorun.exe".

3. Click on the entry “Installation of control software“. The following window will be shown:

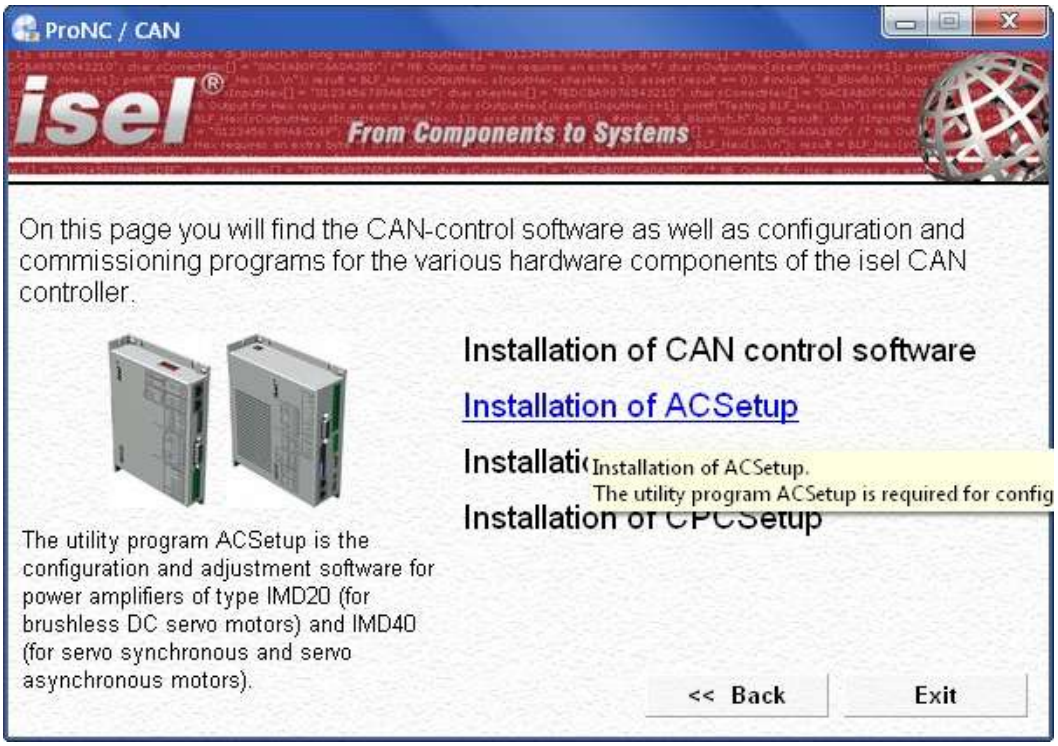

Choose now the setup software depending on your motor type and click on the entry to start the installation. (in this example “**Installation of ACSetup**“)

Follow the instructions of the setup assistant.

After finishing the installation click on button “Exit“ to close the Auto-Start-menu.

Start **DCSetup.exe / ACSetup.exe** via the desktop shortcut or via the start menu entry:
Start →Programs ACSetup → ACSetup / DCSetup

Information on parameterization of motor power amplifiers iMD10 you will find in the manual **/1/ DC-Servo positioning module with CANopen interface UVE8112 / iMD10.** Therefore open the file “dcsetup_eng.pdf “ via shortcut in the start menu.

Information on parameterization of motor power amplifiers iMD20 you will find in the manual **/2/ AC-Servo positioning module with CANopen interface iMD20 / iMD40.** Therefore open the file “acsetup_eng.pdf “ via shortcut in the start menu.

6.2 ProNC / Remote installation and first steps

Operation of the controller **iMC-B / iMC-V** takes place either with the control software Remote or with the control / programming software ProNC.

If there is no operation software installed ex factory do the following steps to install the software later:

1. Connect ProNC / Remote install medium (delivered CD or USB stick) with the control computer.

2. Following Auto-start-window will be shown (when installing from CD):

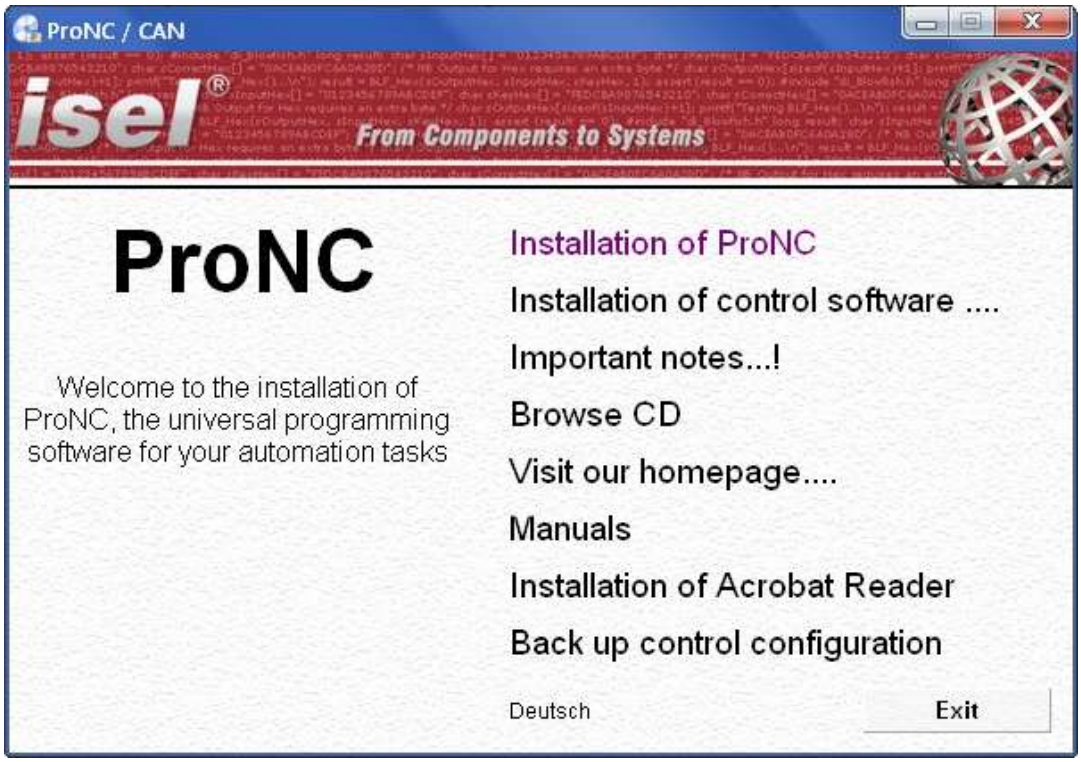

If Auto-Start-window is not shown start the Windows Explorer and open the root directory of the CD/DVD- or USB-drive. Double click on the file "Autorun.exe".

3. Click on the entry "**Installation of ProNC**"

   Choose your language and follow the instructions of the setup assistant.

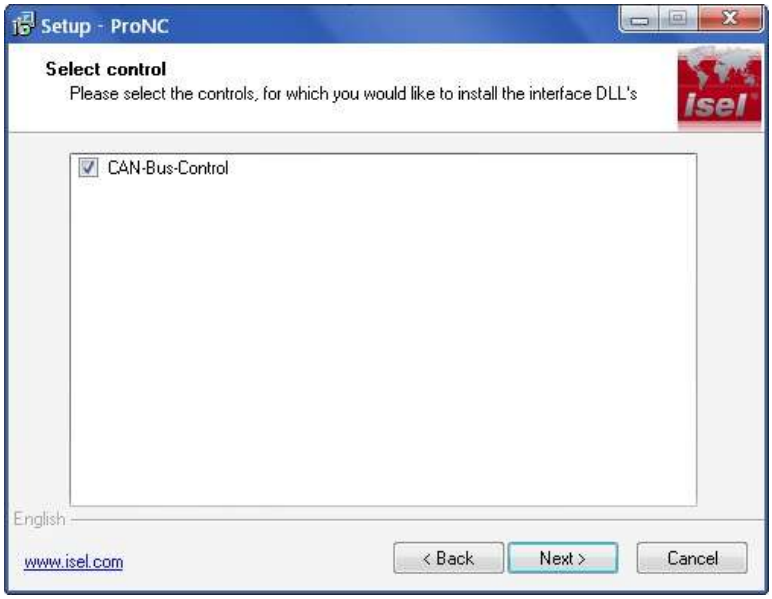

   Mark on setup window "Select control" the option "CAN-Bus-Control" to install the CAN-bus software module.

   After finishing the installation click on button "Exit" to close the Auto-Start-menu.

4. Open the configuration program **CANSet.exe** (shortcut on windows-desktop or start-menu-entry: Start → Programs → isel CAN-CNC-Control → CANSet) to setup machine specific parameters (CAN-interface, used axes, axis type).

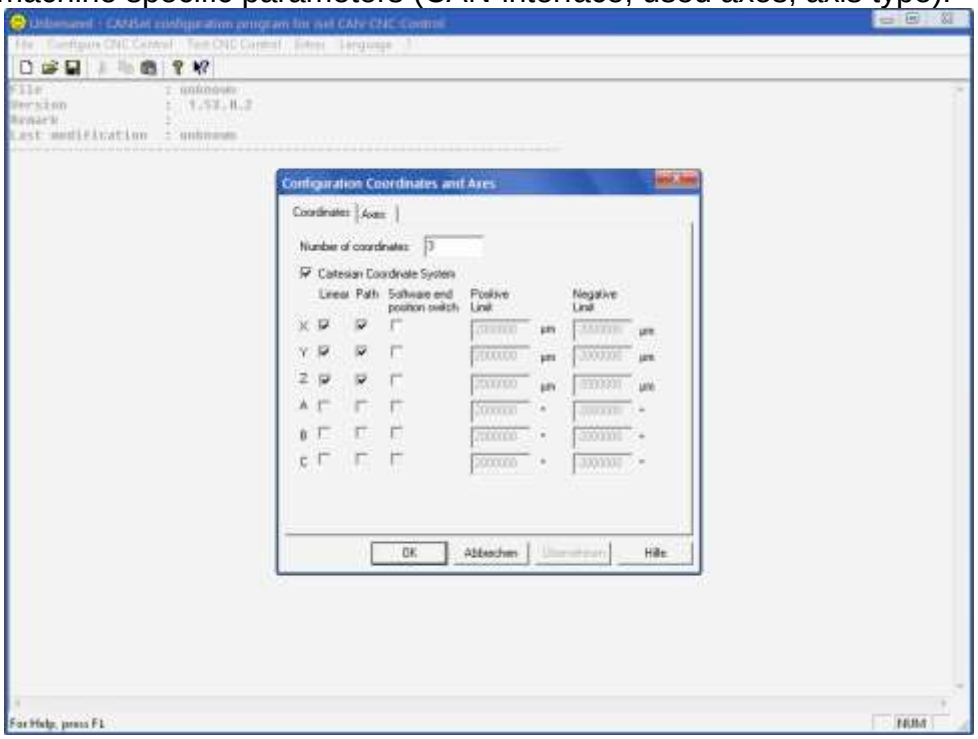

   Save your configuration to an initialization file (*.ini file). The saved file will be used later in the control software ProNC / Remote as motion control initialization file.

5. Open the control software ProNC / Remote via shortcut on the windows desktop or the start menu entry: Start → Programs → CNCworkbench → ProNC/Remote

   Click on entry “control“ in menu “settings“. Mark the entry Motion control modules → Axis system 1. In the bottom right side of the window you will find the settings for the selected axis system. In the edit field “Module initialization file” you must choose your previously with CANSet.exe generated and saved INI-file.

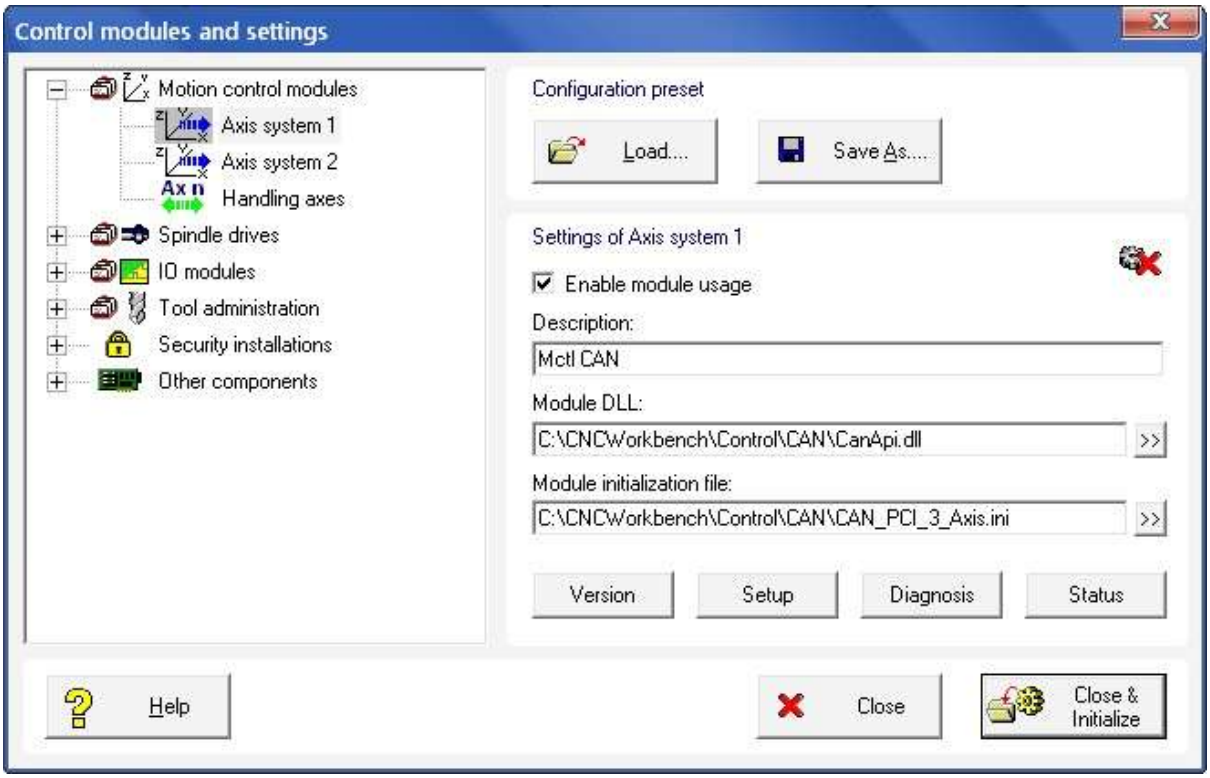

   Click on button “Close & Initialize” to take effect the new settings.

6. Perform a software reset  and a reference run  to check correct behavior of the machine /system.

Additional information to configure ProNC / Remote you can find in the online help (menu help, F1 key).

7 EC - Declaration of Conformity

Der Hersteller
The manufacturer

isel Germany AG
Bürgermeister-Ebert-Str. 40
D-36124 Eichenzell

erklärt hiermit, dass folgendes Produkt
hereby declares that the following product

Geräteart:	**CAN-Servo-Controller**	
Device:	CAN- servo controller	
Typ:	**iMC-B /iMC-V**	
Type:		
Art.-Nr.:	**iMC-B:**	354000 10X0
Product - No.:	**iMC-V:**	354000 20X0

mit den Vorschriften folgender Europäischer Richtlinien übereinstimmt:
complies with the requirements of the European Directives*:*

EG-Richtlinie 2004/108/EG *EC-Directive 2004/108/EC*	EMV Richtlinie *EMC directive*
EG-Richtlinie 73/23/EWG *EC-Directive 73/23/ECC*	Niederspannungsrichtlinie *Low voltage directive*

Folgende harmonisierte Normen wurden angewandt:
Following harmonized standards have been applied:

EN 61000-6-2:2005	EMV - Fachgrundnorm - Störfestigkeit für Industriebereich *EMC - Generic standards - Immunity for industrial environments*
EN 61000-4-2:2007	EMV - Prüf- und Messverfahren - Prüfung der Störfestigkeit gegen Entladung statischer Elektrizität (ESD) *EMC - Testing and measurement techniques; Electrostatic discharge immunity test*
EN 61000-4-4:2004	EMV - Prüf- und Messverfahren - Prüfung der Störfestigkeit gegen schnelle transiente elektrische Störgrößen (Burst) *EMC - Testing and measurement techniques - Electrical fast transient/burst immunity test*
EN 61000-4-5:2006	EMV - Prüf- und Messverfahren - Prüfung der Störfestigkeit gegen energiereiche Impulse (Surge) *EMC - Testing and measurement techniques - Surge immunity test*
EN 61000-4-11:2004	EMV - Prüf- und Messverfahren - Prüfung der Störfestigkeit gegen Spannungseinbrüche / Spannungsunterbrechungen *EMC - Testing and measurement techniques - Voltage dips, short interruptions and voltage variations immunity tests*
EN 61000-6-4:2007	EMV - Fachgrundnorm - Störaussendung Industriebereich *EMC - Generic standards - Emission standard for industrial environments*
DIN EN 55011:2007	Industrielle, wissenschaftliche und medizinische Hochfrequenzgeräte (ISM-Geräte) - Funkstörungen - Grenzwerte und Messverfahren Industrial scientific and medical (ISM) radio-frequency equipment - Electromagnetic disturbance characteristics - Limits and methods of measurement

Dermbach, 13.01.2009

Hugo Isert, Vorstandsvorsitzender / Chairman

8 Bibliography

1. **isel Germany AG.**
Positioniermodul mit CanOpen Interface UVE8112 / iMD10. 03/2008.

2. **isel Germany AG.**
positioning module with CanOpen interface iMD20 / iMD40. 03/2009.

3. **isel Germany AG.**
ProNC User Manual. 2003.

4. **isel Germany AG.**
iSR series operating instruction. 04/2009.

Operating instructions and manuals for download you can find here:

www.isel-data.de/manuals

9 Index